3D-LIBRARY PREVIEW

Haller shelves

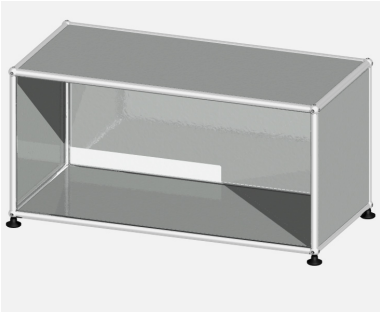

Haller shelves
(max. 8x6 modules)

Haller system configuration
(Return on castors)

Haller system configuration
(Return for Z-Workstation)

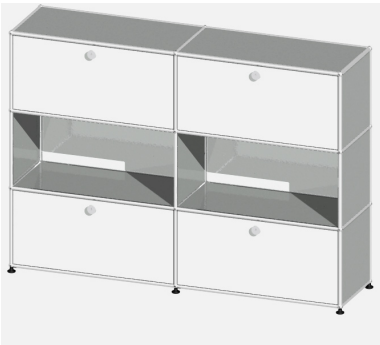

Haller system configuration
(Credenza)

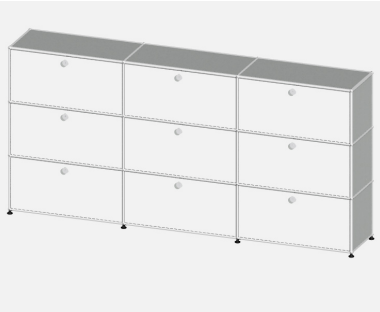

Haller system configuration
(Central storage)

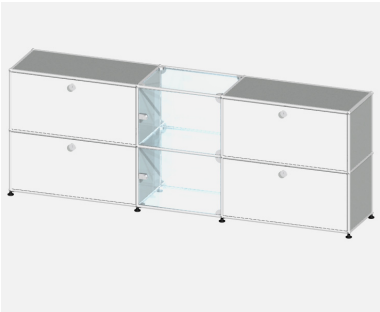

Haller system configuration
(Credenza with glass)

 © USM U. Schärer Söhne AG

Haller table

Haller table

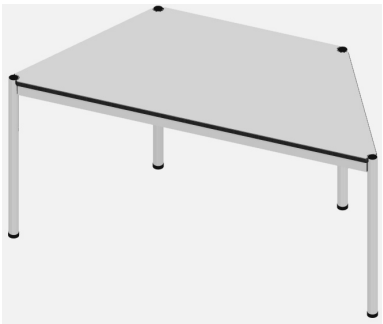

Haller trapezoidal table

Haller triangular table 90_45

Haller triangular table 60

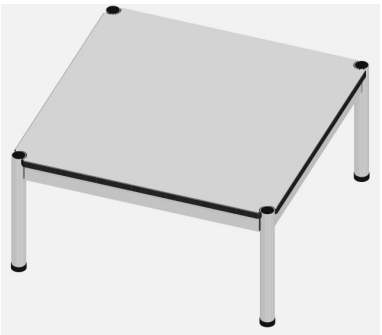

Haller occasional table

 © USM U. Schärer Söhne AG

Haller table combinations

Haller tables combination 01

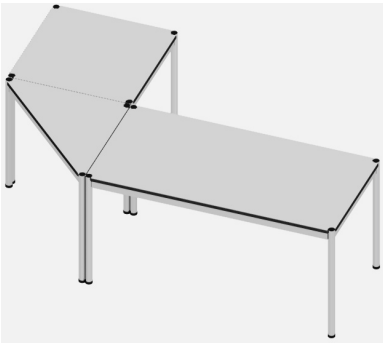

Haller tables combination 02

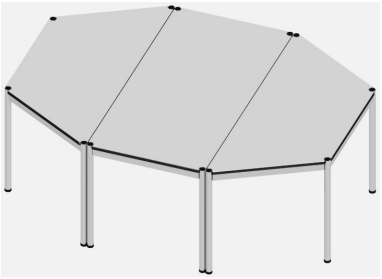

Haller tables combination 03

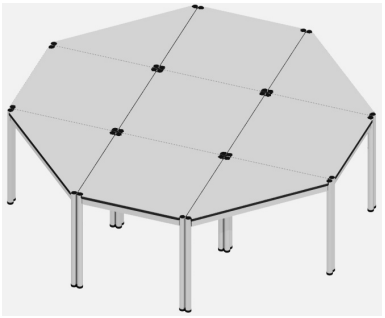

Haller tables combination 04

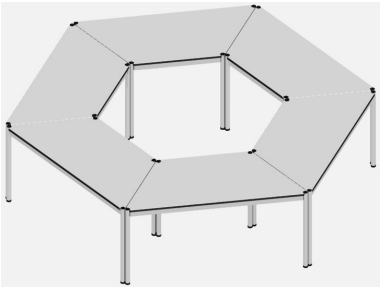

Haller tables combination 05

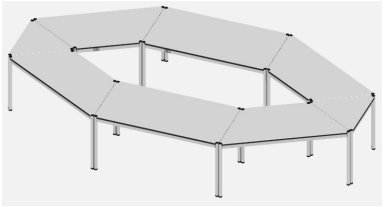

Haller tables combination 06

 © USM U. Schärer Söhne AG

Haller table combinations

Haller tables combination 07

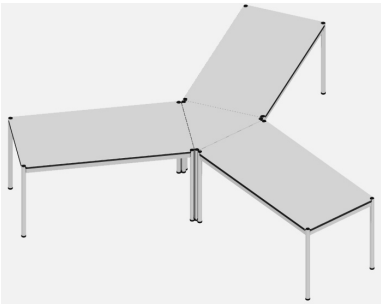

Haller tables combination 08

 © USM U. Schärer Söhne AG